BECK

NC90-40 BC
CORDLESS NARROW CROWN STAPLER

OPERATION MANUAL



BECK-FASTENING.COM



CAUTION!



WARNING!



OPERATION MODE

IMPROPER AND UNSAFE USE OF THIS STAPLER WILL RESULT IN DEATH OR SERIOUS INJURY. IT IS VERY IMPORTANT THAT THE INTENDED OPERATOR OF THIS TOOL READS AND UNDERSTANDS THIS MANUAL BEFORE OPERATING THIS TOOL. KEEP THIS MANUAL AVAILABLE FOR OTHERS BEFORE THEY USE THE STAPLER.

PLEASE KEEP THIS MANUAL IN SAFE PLACE FOR FUTURE REFERENCE.

WARNING: Please read the instructions and warnings for this tool carefully before use. Failure to do so could lead to serious injury.

TABLE OF CONTENT

1. SAFETY 4

1.1. Safety Symbols 4

1.2. General Warning 7

1.3. General Battery Tool Safety Warnings 9

2. SAFETY INSTRUCTIONS FOR STAPLER 12

2.1. Stapler Safety Warnings 12

2.1. Recommended Fasteners and Accessories 15

3. TOOL SPECIFICATIONS 16

4. BATTERY 17

4.1. Battery Level Display 17

4.2. Battery Specification 17

4.3. Battery Charger Specification 18

4.4. Battery & Charger Safety Warning 19

5. FUNCTIONAL DESCRIPTION 21

5.1. Single Sequential Actuation & Contact Actuation 22

5.2. Loading the Tool 24

5.3. Unloading the Tool 25

5.4. Dry-fire Lock out Feature 26

5.5. Adjumstent depth 26

6. ASSEMBLY AND INSTRUCTION 27

7. OPERATION 28

7.1. No-Mar Tip 29

8. MAINTENANCE 30

8.1. Cleaning 30

9. TROUBLE SHOOTING 31

10. EU DECLARATION OF CONFORMITY 32

11. DISPOSAL 33

Author: BECK Fastening GmbH. Changes and errors excepted. All rights reserved.

1 SAFETY

1.1 SAFETY SYMBOLS



WARNING!

This combination of symbol and signal word indicates an imminently hazardous situation which, if not avoided, will result in death or serious injury.



OPERATION MODE

Capability of operation in contact actuation mode.



FASTENER BEING FIRED

This combination of symbol and signal word indicates a potentially dangerous situation that will result in material damage if not avoided.



HELM PROTECTION!

Wear helmet!



EYE PROTECTION!

Wear eye protectiors!



HEARING PROTECTION!

Wear hearing protectors!



CAUTION!

Read and understand the operating instructions before starting!

D.C. — **Direct current**

V — **Volts**

Author: BECK Fastening GmbH. Changes and errors excepted. All rights reserved.

1.1.1. NOISE

The typical A-weighted noise level determined according to EN60745-2-16:

+ Sound pressure level (LpA) : 81.5 dB(A)
+ Sound power level (LWA) : 87.0 dB(A)
+ Uncertainty (K) : 3 dB(A)



CAUTION!

NOTE: The declared noise emission value(s) has been measured in accordance with a standard test method and may be used for comparing one tool with another.

NOTE: The declared noise emission value(s) may also be used in a preliminary assessment of exposure.



HEARING PROTECTION!

Wear ear protection.



WARNING!

The noise emission during actual use of the power tool can differ from the declared value(s) depending on the ways in which the tool is used especially what kind of workpiece is processed.



WARNING!

Be sure to identify safety measures to protect the operator that are based on an estimation of exposure in the actual conditions of use (taking account of all parts of the operating cycle such as the times when the tool is switched off and when it is running idle in addition to the trigger time).

Author: BECK Fastening GmbH. Changes and errors excepted. All rights reserved.

1.1.2. VIBRATION

The vibration total value determined according to EN60745-2-16:

+ Vibration emission (ah) : 1.91 m/s^2 or less
+ Uncertainty (K) : 1.50 m/s^2



NOTE: The declared vibration total value(s) has been measured in accordance with a standard test method and may be used for comparing one tool with another.

NOTE: The declared vibration total value(s) may also be used in a preliminary assessment of exposure.



The declared vibration total value(s) has been measured in accordance with a standard test method and may be used for comparing one tool with another.



Be sure to identify safety measure to protect the operator that are based on an estimation of exposure in the actual conditions of use (taking account of all parts of the operating cycle such as the times when the tool is switched off and when it is running idle in addition to the trigger time).

Author: BECK Fastening GmbH. Changes and errors excepted. All rights reserved.

1.2 GENERAL WARNING



WARNING!

+ User must wear eye protection which conforms to EN 166/ANSI Z87.1 with front and side protection against flying object; when handling, operating, and servicing the tool. It is employer's responsibility to enforce user and all other nearby personnel at worksite to wear eye protection when operatingthe tool.



EYE PROTECTION!

WARNING Eye protection must be worn by the operator and other people in the work area.

WARNING It is employer's responsibility to provide and enforce the use of eye protection by the operator and other people in the work area.



HEARING PROTETCTION!

+ It is recommended to wear **ear protection** near or at the job site to prevent hearing damage. The hearing protection shall comply with the applicable requirements of EN 352 and have a Noise Reduction Rating (NRR) determined in accordance with US EPA regulations, providing an appropriate level of noise attenuation for the expected exposure.



HELM PROTECTION!

+ **Head protection** shall conform to EN 397/ANSI Z89.1.





WARNING!

+ **Dress Properly.** Do not wear loose clothing or jewelry as they can be caught in moving parts. Rubber gloves and nonskid footwear are recommended when working outdoors. Wear protective hair covering to contain long hair.



WARNING!

+ Maintain tools with care. Refer to the tool maintenance instructions for detailed information on the proper maintenance of a tool.



WARNING!

+ This power tool is not intended for use in explosive atmospheres or near flammable materials. Sparks generated during operation may ignite vapors or dust. Do not use the tool in such environments. Do not smoke near the tool or battery.

+ Inspect tool before operating to

  - Determine that tool is in proper working order.

  - Check for misalignment or binding of moving parts and any other condition that may affect tool operation.

+ Do not store the tool in temperature above 120°F (49°C). High temperature will result in explosion or fire and the release of flammable gas. When not in use, keep the tool from high temperature source or direct sun light.

Author: BECK Fastening GmbH. Changes and errors excepted. All rights reserved.

+ The tool needs to be used in well ventilated areas. Do not inhale the exhaust or fume or the gas because they are potentially dangerous to human body.

+ Keep body balance when operating the tool, do not over reach.

+ Keep the tool, fuel, charger and battery out of the reach of children. The tool is dangerous in the hand of untrained person.



+ **When the tool is not in use, it should be placed horizontally. When the tool is placed, avoid the safety yoke being squeezed.**



+ **Do not use assistive devices to make the tool stand upright. If forced to stand, the tool may be triggered unintentionally.**

+ Always check the tool before use for broken, misconnected or worn parts.

+ Do not use a tool if the tool has been damaged.

+ Only technically skilled operators should use the fastener driving tool.

+ Do not discard the safety instructions.

+ Be careful when handling fasteners, especially when loading and unloading, as the fasteners have sharp points which could cause injury.

+ Only wear gloves that provide adequate feel and safe control of triggers and any adjusting devices.

Author: BECK Fastening GmbH. Changes and errors excepted. All rights reserved.

1.3 GENERAL BATTERY TOOL SAFETY WARNINGS



WARNING: Read all safety warnings and all instructions. Failure to follow the warnings and instructions may result in electric shock, fire and/or serious injury.

Save all warnings and instructions for future reference.

The term „tool“ in the warnings refers to your battery tool.

1) WORK AREA SAFETY

a) **Keep work area clean and well lit.** Cluttered or dark areas invite accidents.

b) **Do not operate tools in explosive atmospheres, such as in the presence of flammable liquids, gases or dust.** Power tools create sparks which may ignite the dust or fumes.

c) **Keep children and bystanders away while operating a tool.** Distractions can cause you to lose control.

2) ELECTRICAL SAFETY

Do not expose tools to rain or wet conditions. Water entering a tool will increase the risk of electric shock.

3) PERSONAL SAFETY

a) Stay alert, watch what you are doing and use common sense when operating a power tool. Do not use a power tool while you are tired or under the influence of drugs, alcohol or medication. A moment of inattention while operating tools may result in serious personal injury.

b) Use personal protective equipment. Always wear eye protection. Protective equipment such as dust mask, non-skid safety shoes, hard hat, or hearing protection used for appropriate conditions will reduce personal injuries.

c) Prevent unintentional starting. Ensure the switch is in the off- position before connecting to battery, picking up or carrying the tool. Carrying tools with your finger on the switch or energizing power tools that have the switch on invites accidents.

d) Remove any adjusting key or wrench before turning the power tool on. A wrench or a key left attached to a rotating part of the power tool may result in personal injury.

e) Do not overreach. Keep proper footing and balance at all times. This enables better control of the tool in unexpected situations.

Author: BECK Fastening GmbH. Changes and errors excepted. All rights reserved.

f) Dress properly. Do not wear loose clothing or jewelry. Keep your hair, clothing and gloves away from moving parts. Loose clothes, jewelry or long hair can be caught in moving parts.

g) If devices are provided for the connection of dust extraction and collection facilities, ensure these are connected and properly used. Use of dust collection can reduce dust-related hazards.

4) TOOL USE AND CARE

a) Do not force the tool. Use the correct tool for your application. The correct power tool will do the job better and safer at the rate for which it was designed.

b) Do not use the tool if the switch does not turn it on and off. Any power tool that cannot be controlled with the switch is dangerous and must be repaired.

c) Disconnect plug from the source and/or the battery pack from the tool before making any adjustments, changingaccessories, or storing tools. Such preventive safety measures reduce the risk of starting the tool accidentally.

d) Store idle tools out of the reach of children and do not allow persons unfamiliar with the power tool or these instructions to operate the power tool. Tools are dangerous in the hands of untrained users.

e) Maintain tools. Check for misalignment or binding of moving parts, breakage of parts and any other condition that may affect the power tool‘s operation. If damaged, have the power tool repaired before use. Many accidents are caused by poorly maintained power tools.

f) Use the tool and its accessories only as described in these instructions, and consider the working conditions and the work to be performed. Using the tool for purposes other than those intended may result in a hazardous situation.

g) Recharge only with the charger specified by the manufacturer. A charger that is suitable for one type of battery pack may create a risk of fire when used with another battery pack.

h) Use tools only with specifically designated battery packs. Use of any other battery packs may create a risk of injury and fire.

Author: BECK Fastening GmbH. Changes and errors excepted. All rights reserved.

i) When battery pack is not in use, keep it away from other metal objects, like paper clips, coins, keys, nails, screws or other small metal objects, that can make a connection from one terminal to another. Shorting the battery terminals together may cause burns or a fire.

j) Under abusive conditions, liquid may be ejected from the battery; avoid contact. If contact accidentally occurs, flush with water. If liquid contacts eyes, additionally seek medical help. Liquid ejected from the battery may cause irritation or burns.

5) SERVICE

Have your tool serviced by a qualified repair person using only identical replacement parts. This will ensure that the safety of the power tool is maintained.

2 SAFETY INSTRUCTIONS FOR STAPLERS

1.1 STAPLER SAFETY WARNINGS

+ **Always assume that the tool contains fasteners.** Careless handling of the stapler can result in unexpected firing of fasteners and personal injury.

+ **Do not point the tool towards yourself or anyone nearby.** Unexpected triggering will discharge the fastener causing an injury.

+ **Do not actuate the tool unless the tool is placed firmly against the workplace.** If the tool is not in contact with the workplace, the fastener may be deflected away from your target.

+ **Disconnect the tool from the battery when the fastener jams in the tool.** While removing a jammed fastener, the stapler may be accidentally activated if it is plugged in.

+ **Use caution while removing a jammed fastener.** The mechanism may be under compression and the fastener may be forcefully discharged while attempting to free a jammed condition.

+ **Do not use this stapler for fastening electrical cables.** It is not designed for electric cable installation and may damage the insulation of electric cables thereby causing electric shock or fire hazards.

Author: BECK Fastening GmbH. Changes and errors excepted. All rights reserved.

+ If using this tool in selective actuation mode, always ensure it is in the correct actuation setting



+ Tool user should assess the specific risks that may be present as a result of each use

The fastener driving tool shall be disconnected when unloading fasteners, making adjustments, clearing jams or changing accessories

+ The tool should not be modified unless authorized in the tool manual or approved in writing by the tool manufacturer. The tool may function unexpectedly after the modification and cause dangerous.

+ Do not drive this tool over materials that is too hard or too soft. Hard material can ricochet fastener and hurt people, soft material may be penetrate easily and cause the fastener to free fly.

+ Please keep the tool in clean condition, wipe off grease or oil after work. Do not use any solvent based cleaners to clean the tool. It is possible the solvent will deteriorate the rubber or plastic components on the tool. Greasy handle and body will cause accidental drop of the tool and injury to nearby person.

+ Do not use the tool to perform other job than designate function. Especially not use the tool as a hammer, impact on the tool will increase the risk of cracked body and accidental discharge of fastener.

+ Load the fastener at last to prevent unexpected fastener firing when loading battery.



+ **OPERATING CONTROLS**

- Do not use a tool with missing or damaged safety warning label(s.)
- A tool that is not in proper working order must not be used. Tags and physical segregation shall be used for control.
- Do not remove, tamper with, or otherwise cause tool operating controls to become inoperable.
- Do not operate tool if any portion of the tool operating controls is inoperable, disconnected, altered, or not working properly.

Author: BECK Fastening GmbH. Changes and errors excepted. All rights reserved.

+ TOOL HANDLING



FASTENER BEING FIRED

- Only persons who have read and understand the tool operating/safety instructions should operate the tool.
- Always assume that tool contains fasteners.
- Do not point tool toward yourself or anyone whether it contains fasteners or not.
- Keep bystanders and children away while operating tool.
- Do not actuate tool unless tool is placed firmly against the workpiece.
- Respect tool as a working implement.
- Do not engage in horseplay.
- Stay alert, focus on your work and use common sense when working with tools.
- Do not use tool while tired, after having consumed drugs or alcohol, or while under the influence of medication.
- Do not overreach. Keep proper footing and balance at all times.
- Do not hold or carry tool with a finger on the trigger.
- Drive fasteners into proper work surface only.
- Do not drive fasteners into other fasteners.

- After driving a fastener, tool may spring back (“recoil”) causing it to move away from the work surface. To reduce risk of injury always manage recoil by:
  - always maintaining control of tool.
  - allowing recoil to move tool away from work surface.
  - not resisting recoil such that tool will be forced back into the work surface. In “Contact Actuation Mode” if workpiece contact is allowed to re-contact work surface before the trigger is released, an unintended discharge of a fastener will occur.
  - keeping face and body parts away from tool.
- When working close to an edge of a workpiece or at steep angles use care to minimize chipping, splitting or splintering, or free flight or ricochet of fasteners, which may cause injury.
- Keep hands and body away from the fastener discharge area of the tool.
- Do not load tool with fasteners when any one of the operating controls is activated.
- Do not operate tool with any power source other than that specified in tool operating/safety instructions.
- Always select an actuation system that is appropriate to the fastener application and the training of the operator.
- Use extra caution when driving fasteners into existing walls or other blind areas to prevent contact with hidden objects or persons on other side (e.g., wires, pipes.)

Author: BECK Fastening GmbH. Changes and errors excepted. All rights reserved.

+ **REMOVE THE BATTERY WHEN**

  - Not in use
  - Performing any maintenance or repairs
  - Clearing a jam
  - Elevating, lowering or otherwise moving the tool to a new location
  - Tool is outside of the operator's supervision or control, or
  - Removing fasteners from the magazine

2.2 RECOMMENDED FASTENERS AND ACCESSORIES

+ Use only fasteners made or recommended by the tool manufacturer, or fasteners that perform equivalently to those recommended by the manufacturer.

+ Use only accessories made or recommended by the tool manufacturer, or accessories that perform equivalently to those recommended by the manufacturer.

Remarks: Accessories not included battery, battery charger and fasteners. Please refer to the technical data sheet for their specifications.

Author: BECK Fastening GmbH. Changes and errors excepted. All rights reserved.

3 TOOL SPECIFICATIONS

2.1 TECHNICAL DATA

NC90-40 BC CORDLESS NARROW CROWN STAPLER	
Model	NC90-40 BC
Firing Mode	Single Sequential & Contact Actuation
Voltage	18 V
Height	300 mm I 11.81"
Width	95 mm I 3.74"
Length	290 mm I 11.42"
Tool and Battery Weight	2.73 kg I 6.02 lbs
Tool Weight	2.30 kg I 5.10 lbs
Loading Capacity	108 staples
Stapler Length Range	13 – 40 mm I 15/32" - 1 9/16"
Shank Diameters	18 gauge

Author: BECK Fastening GmbH. Changes and errors excepted. All rights reserved.

4 BATTERY

4.1 BATTERY LEVEL DISPLAY

BATTERY POWER	LIGHT SIGNAL
>80%	
60%	
40%	
>20%	

4.2 BATTERY SPECIFICATION

BATTERY SPECIFICATION	Li-ION BATTERY 18V – 2.0 Ah
Rated Voltage	18 V
Rated Capacity	2.0 Ah
Cell type	Li-Ion
Dimension	110 x 79 x 45 mm (L x W x H) 4.33“ x 3.11“ x 1.77“ (L x W x H)
Energy	36 Wh
Weight	430g I 0.95 lbs

Author: BECK Fastening GmbH. Changes and errors excepted. All rights reserved.

4.3 BATTERY CHARGER SPECIFICATION

BATTERY CHARGER SPECIFICATION	
Charger	ASC 145 DUO
Battery voltage	12 – 36 V
Mains voltage	220 – 240 V
Mains frequency	50 – 60 Hz
Max. charging current	8 A
Output rating	145 W
Charging time for 18 V / 4.0 Ah	30 min
Charging time for 18 V / 8.0 Ah	60 min
Weight	1490 g I 3.28 lbs

BATTERY CHARGER SPECIFICATION	
Charger	ASC 55
Battery voltage	12 – 36 V
Mains voltage	220 – 240 V
Mains frequency	50 – 60 Hz
Max. charging current	3/4 A
Output rating	55 W
Charging time for 18 V / 4.0 Ah	80 min
Charging time for 18 V / 8.0 Ah	160 min
Weight	582 g I 1.28 lbs

Author: BECK Fastening GmbH. Changes and errors excepted. All rights reserved.

4.4 BATTERY & CHARGER SAFETY WARNINGS

+ Do not throw the battery into fire, nor heat the battery.
+ Do not disassemble nor modify the battery Pack.
+ Do not leave the battery in a place of high temperature.(120°F / 49°C or more)
+ Protect the battery from water or moisture.
+ Do not add strong shock, nor drop the battery.
+ Do not solder lead directly to the battery body.
+ Do not heat nor solder the terminals of the battery.
+ Do not short “+”and “–“terminal of the battery with a kind of metal.
+ Do not charge the battery beyond the conditions specified in the delivery documentation.
+ Do not reverse-charge or reverse-connect the battery.
+ When recharging, use the battery charger specifically for that ASC 145 DUO& ASC 55.
+ We suggest that the voltage of battery should not be lower than end voltage/cell when working and storing, or it may cause unrecoverable decay in its capacity.
+ If the battery is stored for more than three months, check its remaining capacity and recharge it if necessary.

Remarks: Please refer to the technical data sheet for the battery

+ DO NOT SHORT CIRCUIT. A battery pack will short circuit if a metal object makes a connection between the positive and negative contacts on the battery pack. Do not place a battery pack near anything that may cause a short circuit, such as coins, keys or nails in your pocket. Do not allow fluids to flow into battery pack. Corrosive or conductive fluids, such as seawater, certain industrial chemicals, and bleach or bleach containing products, etc., can cause a short circuit. A short circuited battery pack may cause fire, personal injury, and product damage.
+ DO NOT DISASSEMBLE. Incorrect reassembly may result in the risk of electric shock, fire or exposure to battery chemicals. If it is damaged, take it to a service facility.

Author: BECK Fastening GmbH. Changes and errors excepted. All rights reserved.

+ AVOID DANGEROUS ENVIRONMENTS. Do not charge battery pack in rain, snow, damp or wet locations. Do not use battery pack or charger in the presence of explosive atmospheres (gaseous fumes, dust or flammable materials) because sparks may be generated when inserting or removing battery pack, possibly causing fire.

+ Do not short the battery cartridge:
(1) Do not touch the terminals with any conductive material.
(2) Avoid storing battery cartridge in a container with other metal objects such as nails, coins, etc.
(3) Do not expose battery cartridge to water or rain.

+ A battery short can cause a large current flow, overheating, possible burns and even a breakdown.

+ Keep work area clean and well lit. Cluttered and dark areas invite accidents

+ Do not operate the appliance in explosive atmospheres, such as in the presence of flammable liquids, gases or dust. Chargers can cause sparks which may ignite dust or fumes.

+ Keep children and other persons away from the area while the charger is in use.

+ The supply cord plug must match the outlet. Modification of the plug in any way is not permissible. Unmodified plugs and corresponding power outlets reduce the risk of electric shock.

+ Avoid body contact with earthed or grounded surfaces such as pipes, radiators, ranges and refrigerators. There is an increased risk of electric shock if your body is earthed or grounded.

+ Do not abuse the supply cord. Never use the supply cord to carry, pull or unplug the appliance. Keep the cord away from heat, oil, sharp edges or moving parts. Damaged or entangled cords increase the risk of electric shock.

+ Only use the battery charger in areas which are dry. Water entering an electric appliance increases the risk of electric shock.

+ Use the charger only to charge the batteries approved of use of this charger.

+ Do not use a charger if its casing or electric supply cord is defective.

+ Store chargers out of reach of children when not in use. Do not allow persons unfamiliar with the appliance or these instructions to operate it. Chargers are dangerous in the hands of untrained users.

+ Maintain the tool carefully. Check to ensure that no parts are broken or damaged in such a way that the tool can no longer function correctly. If any parts are damaged, have the tool repaired before use.

Author: BECK Fastening GmbH. Changes and errors excepted. All rights reserved.

+ Use chargers and the corresponding batteries in accordance with these instructions and as is specified for this particular model. Use of chargers for applications different from those intended could result in hazardous situations.

+ Recharge only with the charger specified by the manufacturer. A charger that is suitable for one type of battery pack may create a risk of fire when used with another battery pack.

+ When not in use, keep the battery and the charger away from paper clips, coins, keys, nails, screws or other small metal objects that could cause a short circuit at the battery terminals or the charging contacts. A short circuit at the battery terminals or charging contacts could result in personal injury (burns) or fire.

+ Under abusive conditions, liquid may be ejected from the battery, Avoid contact with the liquid. If contact accidentally occurs, flush with water. If the liquid comes into contact with the eyes also consult a doctor. Liquids ejected from the battery may cause irritation or burns.

+ Take care to ensure that the charger is standing in a steady, secure position. A falling battery or charger may present a risk of injury to yourself or others.

+ Avoid touching the contacts.

+ Batteries that have reached the end of their life must be disposed of safely and correctly to avoid environmental pollution.

+ This appliance is not intended for use by persons (including children) with reduced physical, sensory or mental capabilities, or lack of experience and knowledge, unless they have been given super-vision or instruction concerning use of the appliance by a person responsible for their safety.

+ Children must be instructed not to play with the tool.

+ Take care to ensure that the batteries suffer no mechanical damage

+ Do not charge or continue to use damaged batteries (e.g. batteries with cracks, broken parts, bent or pushed-in and/or pulled-out contacts).

+ Do not touch the supply cord or extension cord if they are damaged while working. Disconnect the supply cord plug from the power outlet. Damaged supply cords or extension cords present a risk of electric shock.



+ Never operate the tool when it is dirty or wet. Under unfavorable conditions, moisture or dust adhering to the tool's surface—especially conductive dust—may create a risk of electric shock.. Dirty or dusty appliances should thus be checked at the service center at regular intervals, especially if used frequently for working on conductive materials.

Author: BECK Fastening GmbH. Changes and errors excepted. All rights reserved.

5 FUNCTIONAL DESCRIPTION

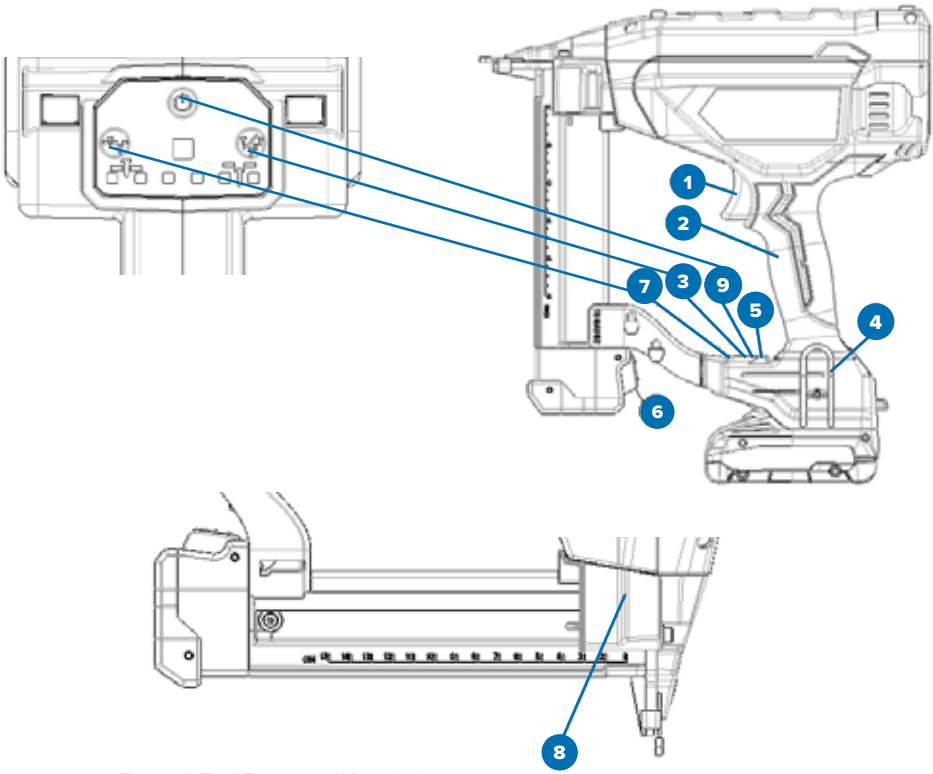

Figure 1: Tool Functional description

1. **Trigger**
2. **Handle**
3. **Actuation Switch Button**
4. **Belt Hook**
5. **Actuation Indicator LED**
6. **Magazine Cover Release Button**
7. **Depth Adjustment Button**
8. **Dry Fire Lock Indicator**
9. **Power Switch Button**

Author: BECK Fastening GmbH. Changes and errors excepted. All rights reserved.

5.1 SINGLE SEQUENTIAL ACTUATION & CONTACT ACTUATION



To activate Single Sequential actuation mode, press button (3) for Continual actuation mode, press and hold the button for approximately 3 seconds. When the green light on button (5) starts flashing, Continual actuation mode will be activated. if the trigger is depressed without operation of the workpiece contact within the trigger time-out period.

5.1.1 SINGLE SEQUENTIAL ACTUATION

To operate the tool in single sequential actuation mode:

1. Fully depress nosepiece against the work surface (motor will start).
2. Pull trigger (fastener will drive into work surface).
3. Release trigger.
4. Lift nosepiece off work surface.
5. Repeat steps 1 through 4 for next application.



OPERATION MODE

NOTICE: The safety needs to be depressed followed by a trigger pull for each fastener followed by a release of both the safety and trigger after each fastener.

Author: BECK Fastening GmbH. Changes and errors excepted. All rights reserved.

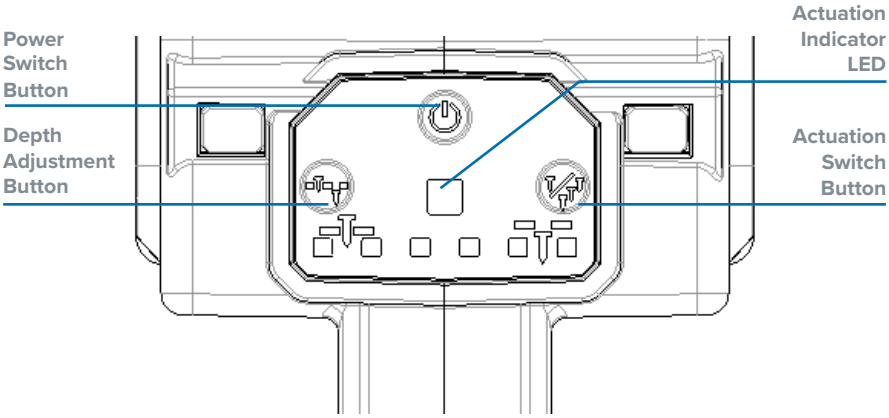

Figure 2: Settings

5.1.2 CONTACT ACTUATION MODE

+ Press the switch for about 5 seconds, the LED indicator flashes green.

To operate the tool using the contact actuation method:

+ Depress the trigger.

+ Push the safety against the work surface. As long as the trigger is depressed, the tool will drive a fastener every time the safety is depressed. This allows the user to drive multiple fasteners in sequence.

Author: BECK Fastening GmbH. Changes and errors excepted. All rights reserved.

5.2 LOADING THE TOOL

OPERATION MODE

Keep the tool pointed away form yourself and others. Serious personal injury may result.

WARNING!

Never load staples with the contact trip or trigger activated. Personal injury may result.

WARNING!

Always remove battery pack before loading or unloading staples. Serious personal injury may result.

+ Press magazine cover release button and open sliding magazine fully.
+ Insert the staples from the buttom of the magazine – the fasteners should point downwards.
+ Close sliding magazine until the magazine latch clips snuggly.

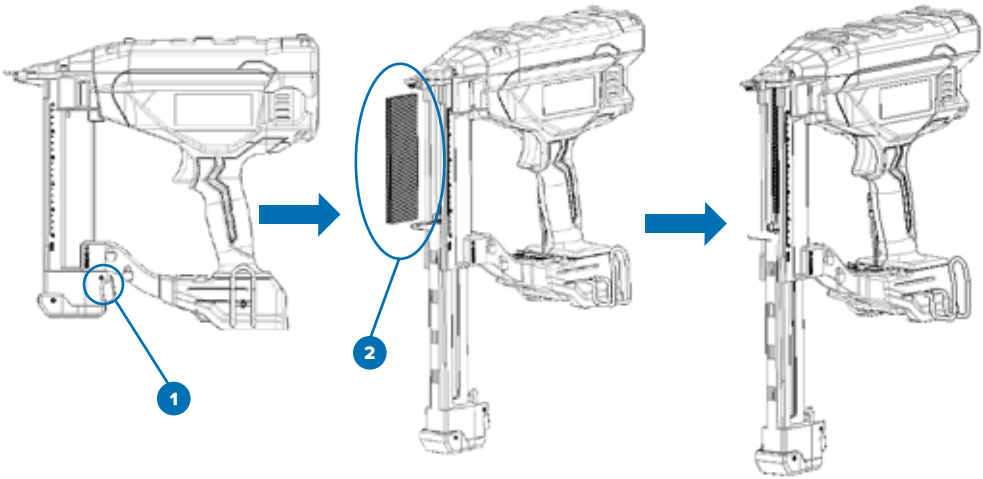

Figure 3: Tool loading

Author: BECK Fastening GmbH. Changes and errors excepted. All rights reserved.

5.3 UNLOADING THE TOOL

WARNING!

+ Press magazine cover release button and open sliding magazine fully.
+ Tip the tool up until the staples slide freely out of the bottom of the magazine. Close sliding magazine fully.

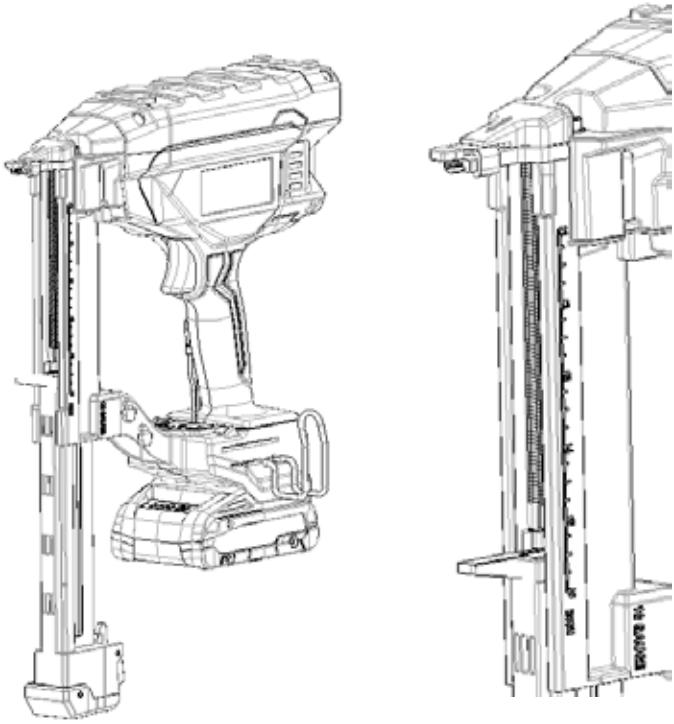

Figure 4: Tool unloading

Author: BECK Fastening GmbH. Changes and errors excepted. All rights reserved.

5.4 DRY-FIRE LOCK OUT FEATURE

+ Tool is equipped with a dry-fire lock out feature to prevent tool from cycling when there are no fasteners loaded. When 6 fasteners are left, the tool stops automatically. Further shots are only possible after refilling.

5.5 ADJUSTING DEPTH



+ The depth that the fastener is driven can be adjusted using the depth adjustment button on the control panel of the tool.



To reduce risk of serious injury form accidental actuation when attempting to adjust depth, ALWAYS:

+ Deinstall battery pack.

+ Avoid contact with trigger during adjustments.

Author: BECK Fastening GmbH. Changes and errors excepted. All rights reserved.

6 ASSEMBLY AND INSTRUCTION

WARNING!

To reduce the risk of serious personal injury, turn unit off and remove the battery pack before making any adjustments or removing / installing attachments or accessories. An accidental start-up can cause injury.

BELT HOOK

The tool includes an integrated belt hook and can be attached to either side of the tool to accommodate left- or right-handed users. If the hook is not desired at all, it can be removed from the tool.

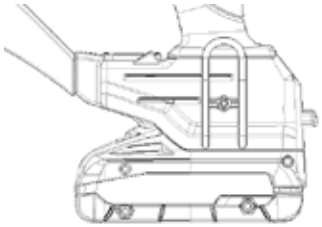

Figure 5: Belt hook

TO REMOVE THE BELT HOOK

+ Remove battery pack from tool.
+ To switch the tool from right- to left-hand usage simply remove the screw 18 from the opposite side of the tool and reassemble on the other side.
+ Replace battery pack

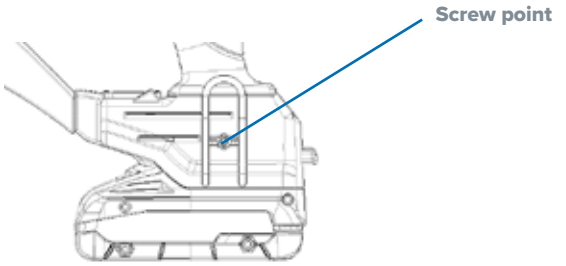

Figure 6: Remove belt hook

Author: BECK Fastening GmbH. Changes and errors excepted. All rights reserved.

7 OPERATION

WARNING!

To reduce the risk of serious personal injury, turn unit off and remove the battery pack before making any adjustments or removing / installing attachments or accessories. An accidental start-up can cause injury.

Installing and Removing the Battery Pack

+ To install the battery pack into the tool handles, align the battery pack with the rails inside the tool's handle and slide it into the handle until the battery pack is firmly seated in the tool and ensure that it does not disengage.

+ To remove the battery pack from the tool, press the release button and firmly pull the battery pack out of the tool handles. Insert it into the charger as described in the charger section of this manual.

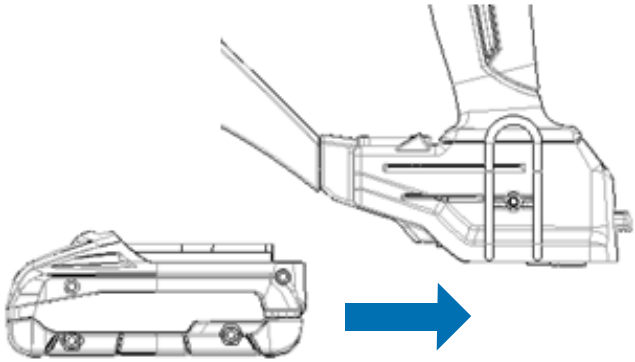

Figure 7: Remove battery pack

WARNING!

Always wear proper eye and hearing protection when operating tool.

EYE PROTECTION!

HEARING PROTETCTION!

The finish stapler is capable of firing staples using bump actuation or sequential actuation. If you would like to have the bump actuation mode disabled, have the tool serviced by an authorized service center.

Before operating this tool, look at the selector switch to determine the actuation mode. Read all instructions before selecting actuation mode.

Author: BECK Fastening GmbH. Changes and errors excepted. All rights reserved.

WARNING!

Keep fingers **AWAY** from trigger when not driving staples to avoid accidental fastener discharge.

FASTENER BEING FIRED

NEVER carry tool with finger on trigger. In bump mode tool will drive a staple if contact trip bumped while trigger is depressed.

7.1 NO-MAR TIP

WARNING!

Always make sure that your fingers are not placed on the switch trigger or the contact element and the battery cartridge is removed before installing the nose adapter.

There are three variations to the No-Mar tip:

1. **No-Mar Tip**
2. **No-Mar Tip**
3. **No-Mar Tip**

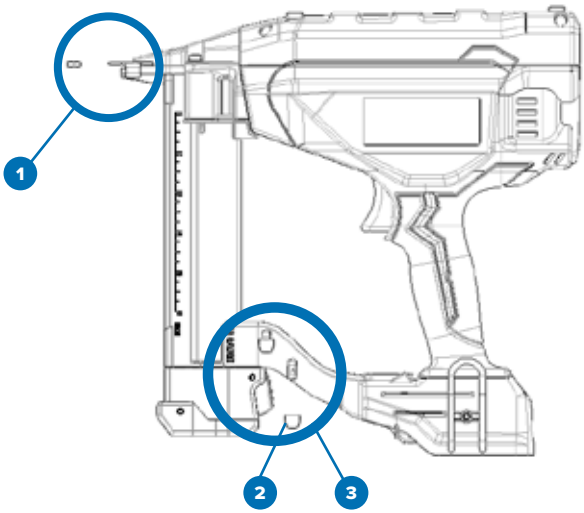

Figure 8: No-Mar Tip

Author: BECK Fastening GmbH. Changes and errors excepted. All rights reserved.

8 MAINTENANCE

+ The employer and tool operator are responsible for assuring that the tool is kept in safe working order. Furthermore only service personnel trained by the manufacturer, distributor, or employer shall repair the tool and shall use the parts or accessories that are supplied or recommended by the tool manufacturer/distributor.

+ **CAUTION:** disconnect the battery before performing any maintenance.

+ Keep the tool in clean condition at all times. Wipe off grease or oil with dry clean cloth to prevent accidental tool drop. Avoid using solvent-based cleaners to remove dirt from the tool. Certain solvent will damage or weaken the composite parts of the tool. Clean the intake filter regularly to keep the tool in full efficiency.

+ **NEVER** use a tool if there is any doubt.

+ **WASTE DISPOSAL:** Follow national regulations for waste disposal so as not to impose hazards to personnel and the environment (page 33).

8.1 CLEANING



Blow dirt and dust out of all air vents with clean, dry air at least once a week. To reduce the risk of eye injury, always wear approved eye protection when performing this maintenance.



Never use solvents or other harsh chemicals to clean the non-metallic parts of the tool. These substances may weaken the plastics used in these components. Use a cloth dampened only with water and mild soap. Never allow any liquid to enter the tool, and never immerse any part of the tool in liquid.

COLD WEATHER

+ This tool is not suggested to be used in cold weather. The cold weather will decrease the battery performance. Use the tool only at temperature above -7°C (19°F). Tip the tool up until the staple slide freely out of the side of the magazine. Close sliding magazine fully.

STORAGE

+ When not in use for an extended period, apply a thin coat of the lubricant to the steel parts to avoid rust. Do not store the stapler in a cold weather environment. When not in use, the stapler should be stored in a warm and dry place. Keep out of reach from children.

Author: BECK Fastening GmbH. Changes and errors excepted. All rights reserved.

9 TROUBLE SHOOTING

SYMPTOME	COUNTER MEASURES
Red LED indicator light is on and the tool does not operate	Battery power might be too low
	Replace battery with a fully charged one
Dry-fire lock out indicator is shown red and the tool does not operate	The tool is equipped with a dry-fire lock out
Red LED indicator light is two flashes and the tool does not operate	The tool motor is locked
Red LED indicator light is three flashes and the tool does not operate	The tool motor is over current
Red LED indicator light is four flashes and the tool does not operate	The motor high temperature protection
Red LED indicator light is five flashes and the tool does not operate	The motor low temperature protection .
Red LED indicator light is six flashes and the tool does not operate	The tool battery pack Voltage exceeds 22 volts.
For failure other than above situation, please stop using the tool and contact your local dealer for service	

Table 1: Possible malfunctions

Please send the tool back to the tool manufacturer/distributor, if failure other than those as tabulated above occurs.

Author: BECK Fastening GmbH. Changes and errors excepted. All rights reserved.

10 EU DECLARATION OF CONFORMITY

This verifies that the product specified below complies with the regulations of the following European directives:

Machinery directive: EMC Directive 2014/30/EU, RoHS Directive 2011/65/EU; 2006/42 EC

Product name: NC90-40 BC Cordless Narrow Crown Stapler

Department designated with documentation

R&D

The manufacturer

Company: BECK Fastening GmbH
Address: Raimund Beck Strasse 1
5270 Mauerkirchen
AUSTRIA

The following harmonised standards have been applied:

DIN EN ISO 12100-2011 „Safety of Machinery“
DIN EN ISO 11148-13:2019 „Hand-Held Non-Electric Power Tools“
EMC Standards EN 55014-1,
EN 55014-2,
EN 61000-3-2
EN 61000-3-3
EN 60745-1
EN 60745-2-16
In accordance with the provisions of the EM Directive 2014/30/EU, RoHS Directive 2011/65/EU, 2006/42/EC

5270 Mauerkirchen, 1 April , 2026

Dipl.-Kfm. Christian Beck
Chief Executive Officer (CEO)

Author: BECK Fastening GmbH. Changes and errors excepted. All rights reserved.

11 DISPOSAL

Environmental damage in the event of non-environmentally friendly disposal. Clean the tool before disposal. Follow the applicable regulations for disposing of oils and greases. Do not dispose of this power tool, including battery and charger, with household waste. Take the tool to an appropriate recycling facility in accordance with local regulations.

Never dispose of the Stapler or parts thereof in normal household waste. If you want to dispose of the fastener drive tool, please return it to the manufacturer. The manufacturer and authorized dealers take responsibility for proper disposal of the fastener drive tool. You can find the manufacturer‘s contact details on page 32.

CAUTION
Improper disposal causes environmental damage!
Please follow the applicable disposal regulations.

Observe your local and national laws, guidelines, standards and regulations for disposal.



+ Waste electrical and electronic equipment
+ Packaging

Author: BECK Fastening GmbH. Changes and errors excepted. All rights reserved.

NOTES:

Author: BECK Fastening GmbH. Changes and errors excepted. All rights reserved.

BECK Fastening GmbH
Raimund-Beck-Strasse 1
AUSTRIA
Tel.: +43 7724 2111-0
www.beck-fastening.com
E-Mail: sales@beck-fastening.com

BECK Fastening GmbH. All rights reserved.
In particular, copying, translating, and distributing this documentation is strictly prohibited.