TOOL CODE	ESP
R31795	6.0

HEAD CN15W–PS90 SCR ES MAG

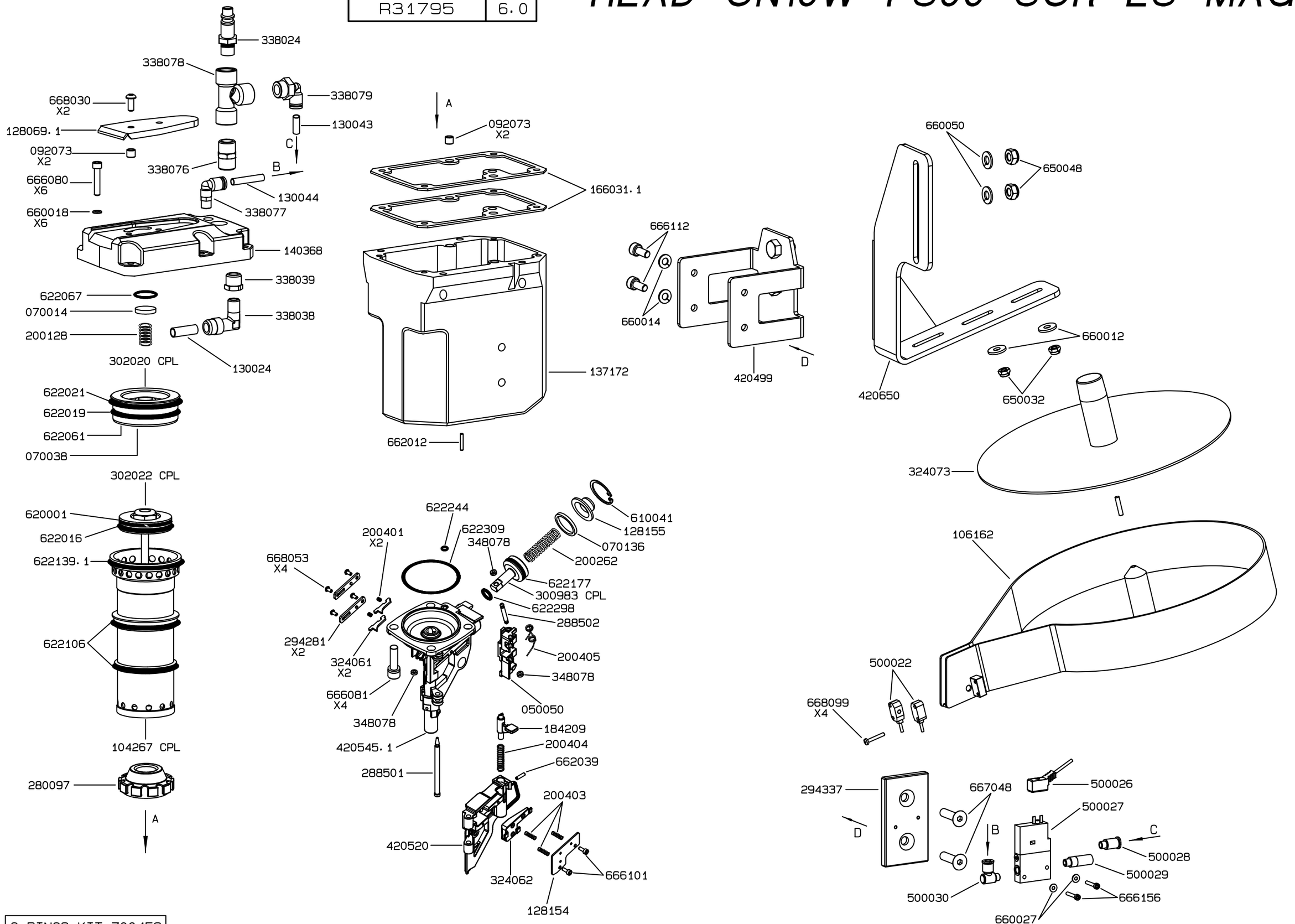

O-RINGS KIT 700459