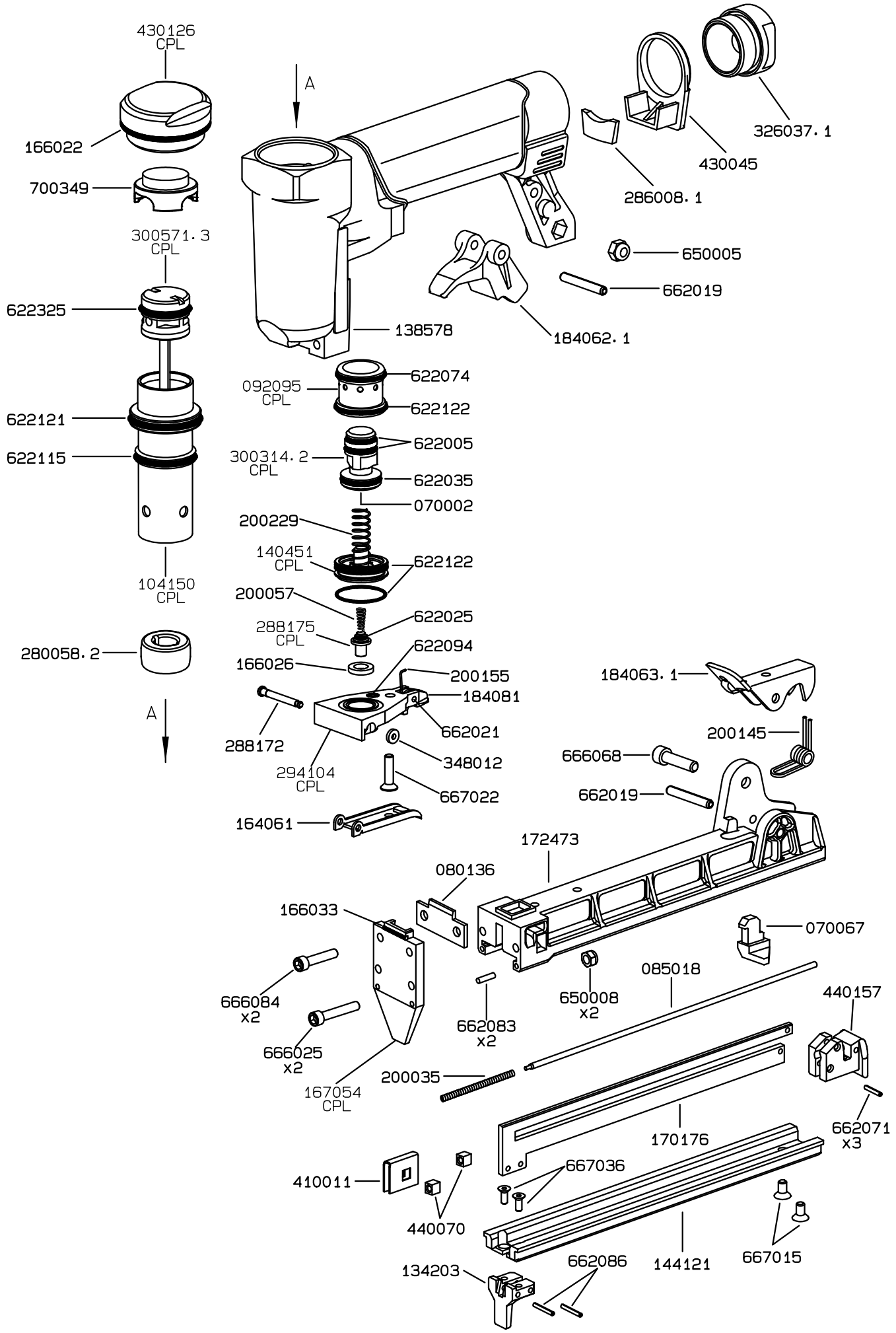ESP	MACHINE CODE
0	11082.02
DESC.	F1B 54DF-19