REV	MACHINE CODE
0	11615.01
DESC.	F70G FENCE 45-315 Li EU

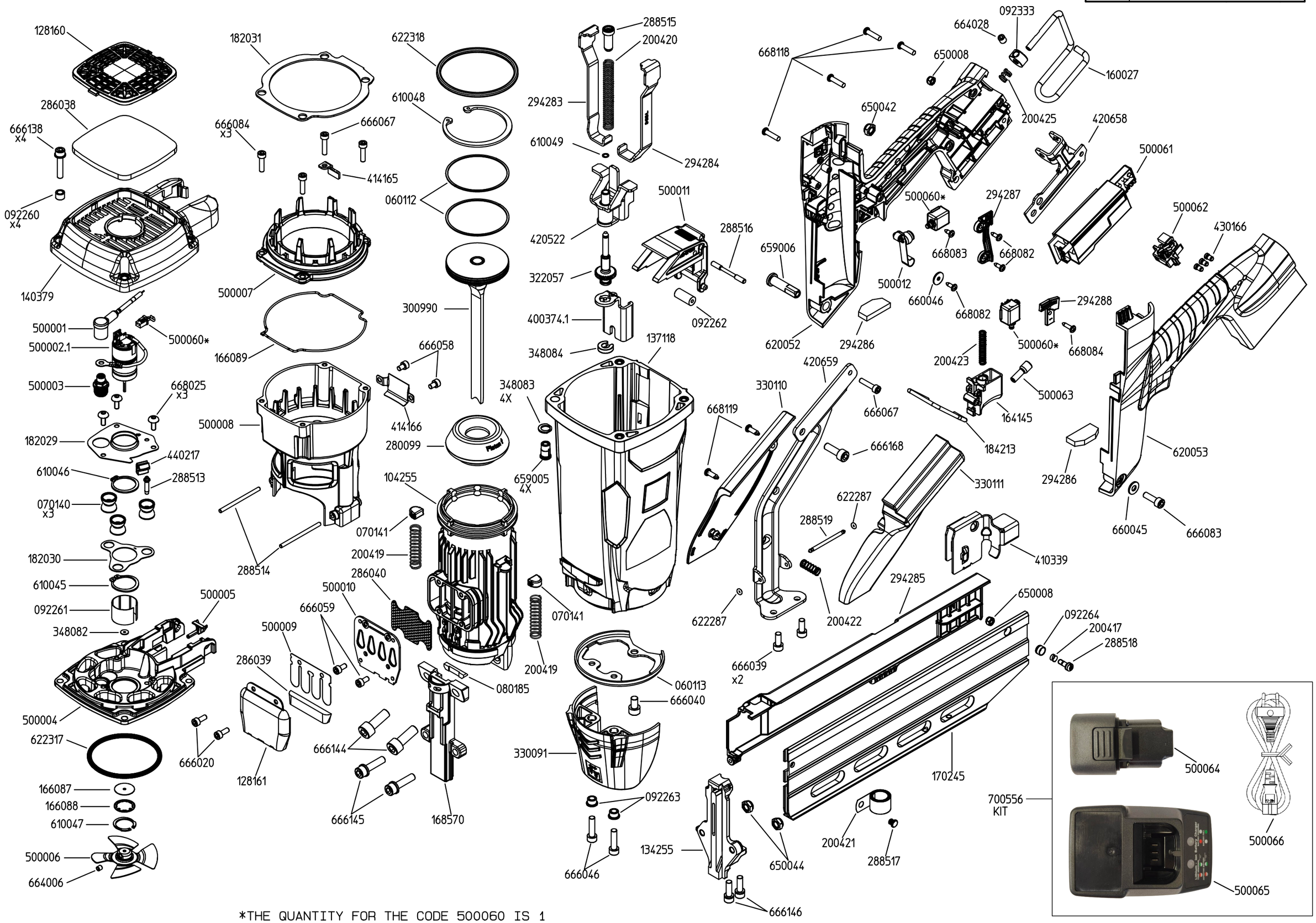

*THE QUANTITY FOR THE CODE 500060 IS 1