ESP	MACHINE CODE
1	11545.01
DESC.	F91BC RHN20-130 L.M. R.C.
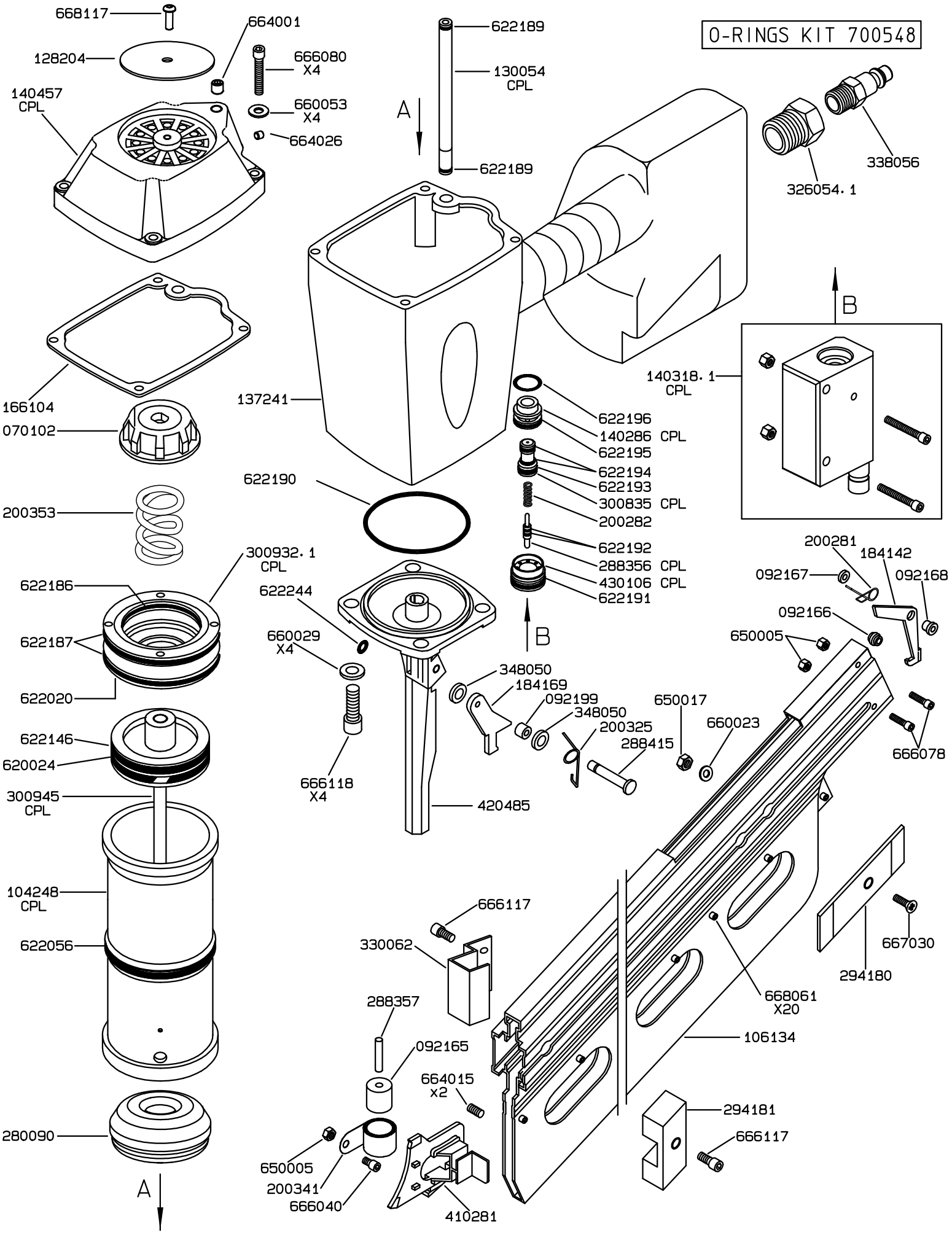
O-RINGS KIT 700548